IO543: Scheduling

Lecture 22

Brian Denton
Associate Professor, IOE

IOE Bld 2893
btdenton@umich.edu

Announcements

Assignment 7 is due next Tuesday

Project presentations next week

-Plan for 8 minutes to leave time for 1-2 questions or comments

-Send me your slides <u>no later than 10am</u> the morning of the presentation (bring a backup on a flashdrive)

Project Schedule

April 12:

Semiconductor Manufacturing: Yixing Lu, Yuzhi Wan, Xue Huang

Scheduling Commercials on TV: David Sachs, Bevin Mathew

Learning Effects in Scheduling: Ling Ken, Chao Xia, Wensi Wang and Chengwei Zhai

Ship Production Scheduling: Lauren Claus, Daniel Kilcullen, Seng-Hsiang Lin

Patient Scheduling in Clinics: Armando Bernal, Victor Fuentes, Seok Joo Kwak, Jamie Yap

Job Shop Problems with Earliness and Lateness Objective: Wenbo Sun, Qi He

Airport Runway Scheduling: Michael Bruk, Martha Neubauer, and Eleanore An.

Project Schedule

April 14

Uber Dispatching: Zhengyang Wun, Ji Wu, Xiaoying Qing

Scheduling in the Olympics: Christine Abney, Amada Bayagich, Eric Buchsbaum, Lauren Fitzpatrick

Nurse Scheduling: Kelly Ogiesoba, Matt Rouhana, Joe Scherping

Baseball Scheduling: Maria Lopez, Anthony Sciuto, Alejandro Vigo

Medical Procedure Scheduling: Esmaeil Keyvanshokooh, Ece Sanci, Karmel Shehadeh

The South U Dilemma: Olivia Melendez, Jacob Villareal, Mitch McKinstry

Final Exam

IOE543 Final Exam: April 27, 10:30-12:30, Room 1610 IOE

The final exam will focus on material since the midterm

You may bring:

- a single 8.5”x11” sheet of paper with notes on both sides
- calculator without wireless capability

Today

Stochastic Project Scheduling

Project Scheduling

Projects involve activities that are often highly stochastic and thus a **stochastic version of** $\boldsymbol{P\infty \mid prec \mid C_{max}}$ is called for

Examples:

- Construction projects
- Installing new IT systems
- Product design
- Corporate mergers
- Space exploration
- Military operations

Example: $P\infty \mid prec \mid C_{max}$

A firm plans to launch a new product. A list of activities, their predecessors, and activity durations are below. Draw a project diagram for this project

Activity	Predecessors	Duration(days)
A:train workers	-	6
B:purchase raw materials	-	9
C:produce product 1	A, B	8
D:produce product 2	A, B	7
E:test product 2	D	10
F:assemble products 1&2	C, E	12

Example: $P\infty \mid prec \mid C_{max}$

Example Project Network:

Node 1 = starting node
Node 6 = finish node

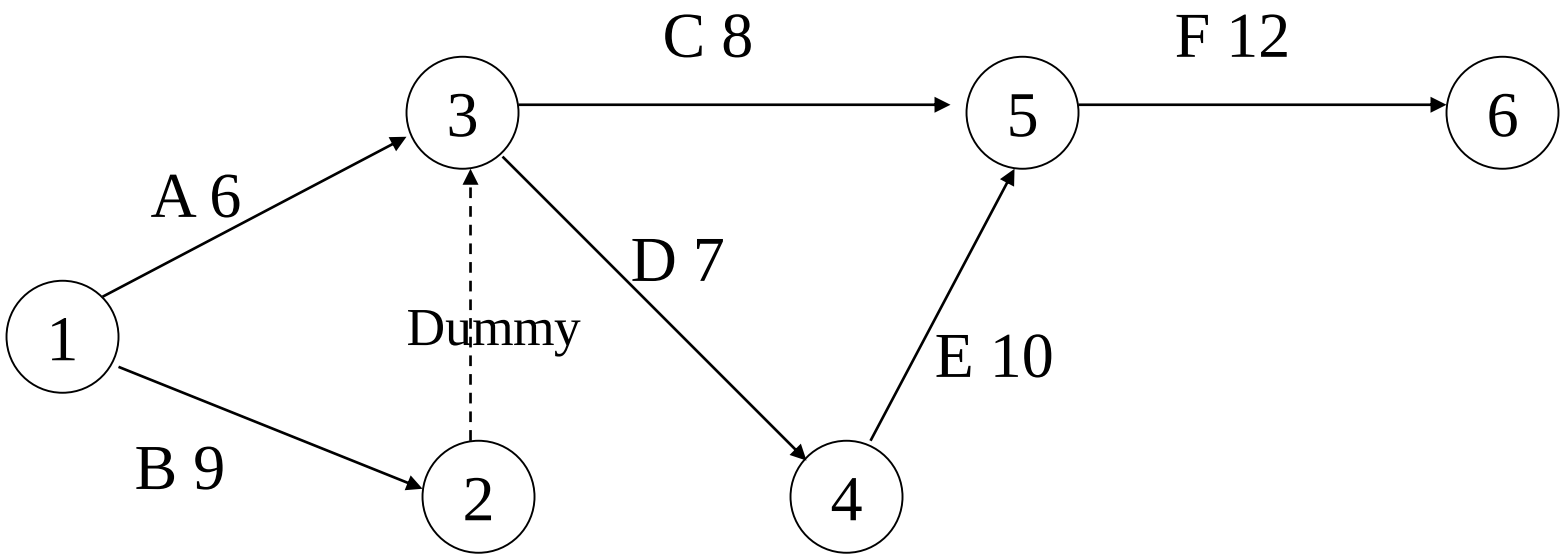

Completion time for activities A,B,C,D,E,F, are random variables

PERT: Stochastic $P\infty \mid prec|C_{max}$

The **Program Evaluation and Review Technique** (PERT) is the best known method for project scheduling under uncertainty

T_{ij} is the random duration of activity *(i,j)* that is assumed to follow the <u>beta distribution</u> defined by 3 parameters:

a = estimate of activity duration under **most favorable** conditions

b = estimate of activity duration under **least favorable** conditions

m = **most likely** value for the activity's duration

Beta Distribution

The **beta distribution** is defined by two parameters $(\alpha_1, \alpha_2)$with the following relationship to a,b,m:

a= minimum value
b= maximum value
m= most likely
r= (b-m)/(m-a)
$\alpha_1 = (4 + 3r + r^2) / (1 + r^2)$
$\alpha_2 = (1 + 3r + 4r^2) / (1 + r^2)$

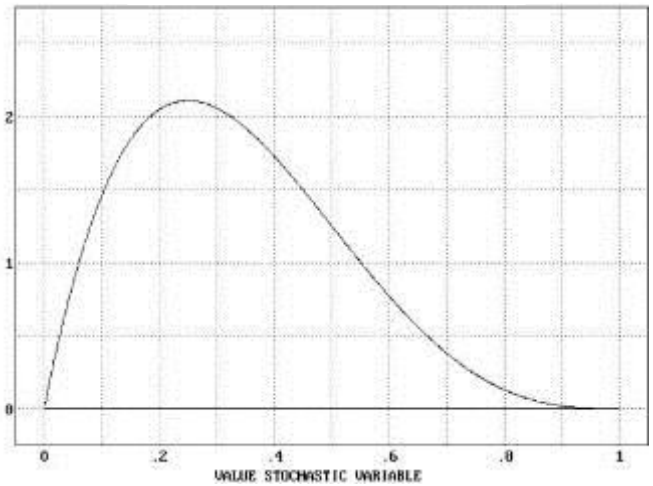

Generalized Beta Distribution:
$a + (b-a)BETA(\alpha_1 , \alpha_2)$

PERT

Assuming a beta distribution for random activity duration T_{ij} the following are the activity mean and variance:

$$E\left[T_{ij}\right] = \frac{a+4m+b}{6}$$

$$Var\left(T_{ij}\right) = \frac{(b-a)^2}{36}$$

and the mean and variance of a given path length are:

$$\sum_{(i,j)\in path} E[T_{ij}]\,, \quad \sum_{(i,j)\in path} Var(T_{ij})$$

Example: PERT

PERT employs the **central limit theorem** by assuming that the path lengths (e.g. critical path) are normally distributed

Example:

Activity	a	b	m
A	2	10	6
B	5	13	9
C	5	13	8
D	1	13	7
E	8	12	10
F	9	15	12

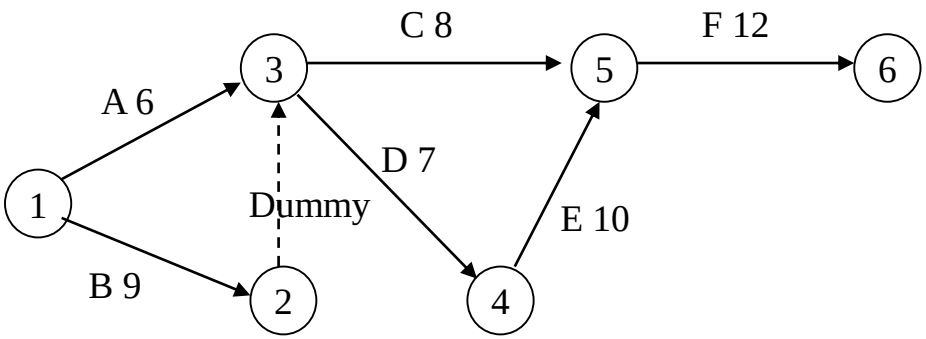

What is the probability the project completes in 35 days?

Aside: Normal Distributions

Normal Deviate z	.00	.01	.02	.03	.04	.05	.06	.07	.08	.09
-4.0	.0000	.0000	.0000	.0000	.0000	.0000	.0000	.0000	.0000	.0000
-3.9	.0000	.0000	.0000	.0000	.0000	.0000	.0000	.0000	.0000	.0000
-3.8	.0000	.0000	.0000	.0000	.0000	.0000	.0000	.0000	.0000	.0000
-3.7	.0001	.0001	.0000	.0000	.0000	.0000	.0000	.0000	.0000	.0000
-3.6	.0002	.0002	.0001	.0001	.0001	.0001	.0001	.0001	.0001	.0001
-3.5	.0002	.0002	.0002	.0002	.0002	.0002	.0002	.0002	.0002	.0002
-3.4	.0003	.0003	.0003	.0003	.0003	.0003	.0003	.0003	.0003	.0002
-3.3	.0005	.0005	.0005	.0004	.0004	.0004	.0004	.0004	.0004	.0003
-3.2	.0007	.0007	.0006	.0006	.0006	.0006	.0006	.0005	.0005	.0005
-3.1	.0010	.0009	.0009	.0009	.0008	.0008	.0008	.0008	.0007	.0007
-3.0	.0013	.0013	.0013	.0012	.0012	.0011	.0011	.0011	.0010	.0010
-2.9	.0019	.0018	.0018	.0017	.0016	.0016	.0015	.0015	.0014	.0014
-2.8	.0026	.0025	.0024	.0023	.0023	.0022	.0021	.0021	.0020	.0019
-2.7	.0035	.0034	.0033	.0032	.0031	.0030	.0029	.0028	.0027	.0026
-2.6	.0047	.0045	.0044	.0043	.0041	.0040	.0039	.0038	.0037	.0036
-2.5	.0062	.0060	.0059	.0057	.0055	.0054	.0052	.0051	.0049	.0048
-2.4	.0082	.0080	.0078	.0075	.0073	.0071	.0069	.0068	.0066	.0064
-2.3	.0107	.0104	.0102	.0099	.0096	.0094	.0091	.0089	.0087	.0084
-2.2	.0139	.0136	.0132	.0129	.0125	.0122	.0119	.0116	.0113	.0110
-2.1	.0179	.0174	.0170	.0166	.0162	.0158	.0154	.0150	.0146	.0143
-2.0	.0228	.0222	.0217	.0212	.0207	.0202	.0197	.0192	.0188	.0183
-1.9	.0287	.0281	.0274	.0268	.0262	.0256	.0250	.0244	.0239	.0233
-1.8	.0359	.0351	.0344	.0336	.0329	.0322	.0314	.0307	.0301	.0294
-1.7	.0446	.0436	.0427	.0418	.0409	.0401	.0392	.0384	.0375	.0367
-1.6	.0548	.0537	.0526	.0516	.0505	.0495	.0485	.0475	.0465	.0455
-1.5	.0668	.0655	.0643	.0630	.0618	.0606	.0594	.0582	.0571	.0559
-1.4	.0808	.0793	.0778	.0764	.0749	.0735	.0721	.0708	.0694	.0681
-1.3	.0968	.0951	.0934	.0918	.0901	.0885	.0869	.0853	.0838	.0823
-1.2	.1151	.1131	.1112	.1093	.1075	.1056	.1038	.1020	.1003	.0985
-1.1	.1357	.1335	.1314	.1292	.1271	.1251	.1230	.1210	.1190	.1170
-1.0	.1587	.1562	.1539	.1515	.1492	.1469	.1446	.1423	.1401	.1379
-.9	.1841	.1814	.1788	.1762	.1736	.1711	.1685	.1660	.1635	.1611
-.8	.2119	.2090	.2061	.2033	.2005	.1977	.1949	.1922	.1894	.1867
-.7	.2420	.2389	.2358	.2327	.2296	.2266	.2236	.2206	.2177	.2148
-.6	.2743	.2709	.2676	.2643	.2611	.2578	.2546	.2514	.2483	.2451
-.5	.3085	.3050	.3015	.2981	.2946	.2912	.2877	.2843	.2810	.2776
-.4	.3446	.3409	.3372	.3336	.3300	.3264	.3228	.3192	.3156	.3121
-.3	.3821	.3783	.3745	.3707	.3669	.3632	.3594	.3557	.3520	.3483

More on normal distributions:

http://www.mathsisfun.com/data/standard-normal-distribution-table.html

Problems with PERT

PERT makes some **strong assumptions**:

- Activity durations are independent
- Activity durations follow the beta distribution
- Employs central limit theorem
- Critical path found based on the mean activity times is the critical path for all outcomes

Monte Carlo Simulation

Monte Carlo Simulation can be used to provide more accurate estimates

```
MeanCompTime=0;VarCompTime=0;k=0; S=10000
for s=1:S
    for i=1:A;
        T(i) = a(i) + (b(i)-a(i))*betarnd(alpha1(i), alpha2(i));
   end
    ET(3)= max(T(1), T(2));
    ET(5)=max(ET(3)+T(3),ET(3)+T(4)+T(5));
    ET(6)=et(5)+T(6);
    MeanCompTime = MeanCompTime + ET(6);
    VarCompTime = VarCompTime + (ET(6))^2;
     if ET(6) <= 35 k=k+1; end
end

MeanCompTime = MeanCompTime/S
VarCompTime = VarCompTime/S -(MeanCompTime)^2
ProbCompTime = k/S
```

Stanislaw Ulam